Naturalistic Music Decoding from EEG Data via Latent Diffusion Models

1st Emilian Postolache*
DAIS
Ca' Foscari University of Venice
Venice, Italy
emilian.postolache@unive.it

2nd Natalia Polouliakh
Sony CSL
Tokyo, Japan
nata@csl.sony.co.jp

3rd Hiroaki Kitano
Sony CSL
Tokyo, Japan
h.kitano@csl.sony.co.jp

4th Akima Connelly
Dept. of TSE
Tokyo Institute of Technology
Tokyo, Japan
connelly.a.aa@m.titech.ac.jp

5th Emanuele Rodolà
Dept. of Computer Science
Sapienza University of Rome
Rome, Italy
rodola@di.uniroma1.it

6th Luca Cosmo
DAIS
Ca' Foscari University of Venice
Venice, Italy
luca.cosmo@unive.it

7th Taketo Akama
Sony CSL
Tokyo, Japan
taketo.akama@sony.com

arXiv:2405.09062v6 [cs.SD] 9 Jan 2025

***Abstract*—In this article, we explore the potential of using latent diffusion models, a family of powerful generative models, for the task of reconstructing naturalistic music from electroencephalogram (EEG) recordings. Unlike simpler music with limited timbres, such as MIDI-generated tunes or monophonic pieces, the focus here is on intricate music featuring a diverse array of instruments, voices, and effects, rich in harmonics and timbre. This study represents an initial foray into achieving general music reconstruction of high-quality using non-invasive EEG data, employing an end-to-end training approach directly on raw data without the need for manual pre-processing and channel selection. We train our models on the public NMED-T dataset and perform quantitative evaluation proposing neural embedding-based metrics. Our work contributes to the ongoing research in neural decoding and brain-computer interfaces, offering insights into the feasibility of using EEG data for complex auditory information reconstruction.**

***Index Terms*—Generative AI, music generation, electroencephalography, diffusion models**

I. Introduction

In this paper, we focus on a method that decodes musical information from brain waves captured by electroencephalography (EEG). Reconstruction of musical information conditioned on functional magnetic resonance imaging (fMRI) has been recently proposed in [1] by mapping the signals to MuLan [2] embeddings and generating with the MusicLM [3] autoregressive model. Another work [4] performs realistic music reconstruction of unseen chunks of a song using electrocorticography (ECoG). The downside of fMRI and, especially, of ECoG, is the difficulty of acquiring data from subjects, since fMRI scanners are unfeasible for real-time capture while ECoG is invasive, placing electrodes inside the subject's skull.

E.P. and E.R. were partially supported by the ERC grant no. 802554 (SPECGEO), PRIN 2020 project no. 2020TA3K9N (LEGO.AI), and PNRR MUR project no. PE0000013-FAIR. E.P. and L.C. were partially supported by PRIN 2022 project no. 2022AL45R2 (EYE-FI.AI, CUP H53D2300350-0001).

*Work partially done during an internship at Sony CSL Tokyo.

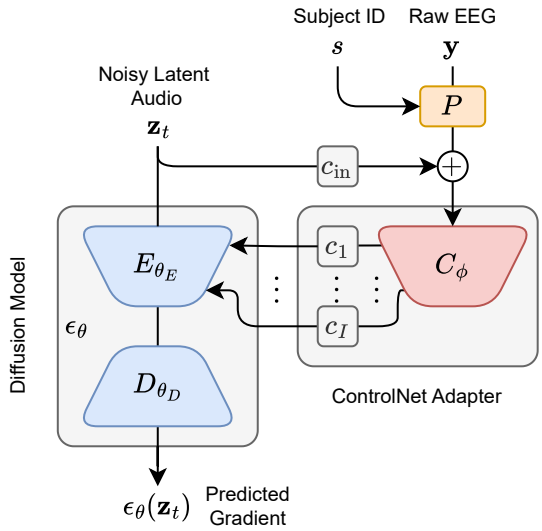

Fig. 1. **Illustration of proposed method.** We use ControlNet for conditioning a diffusion model on EEG data, in order to decode high-quality naturalistic music.

In contrast, EEG is non-invasive and can be recorded using wearable devices [5].

To our knowledge, [6] is the only work that is able to decode music from EEG signals alone (although with less success than when using a hybrid EEG-fMRI representation). At the same time, the method is limited by *(i)* the necessity of manually processing and filtering the raw data for successful training of the neural network decoder (a BLSTM [7]) and *(ii)* the focus on mono-timbral piano music which does not exhibit the variety of realistic music. In the vein of [8], which proposes a contrastive method for mapping speech to text without manually processing the dataset, we propose a method which is agnostic to manual pre-processing, based on denos-

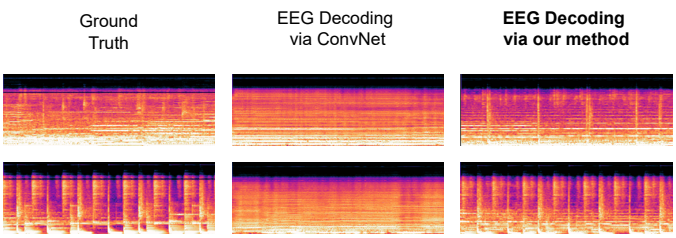

Fig. 2. **Qualitative results of our method.** On the left ground truth, musical chunks. In the middle, reconstructions obtained via a baseline ConvNet. On the right, decodings obtained by our method. Notice how our method better matches the real tracks.

ing diffusion [9], [10]. We also target the more challenging scenario of naturalistic music decoding (i.e., complex music containing multiple stems, featuring rich timbre and harmony, as opposed to mono-timbral or MIDI generated music).

Diffusion models [9], [10] have proven to be a surprisingly powerful and flexible class of generative models, being applicable to any type of continuous data, such as images [11], [12] and audio [13], [14]. In the audio domain, in addition to general audio synthesis [15], [16], various models have been specialized in different tasks ranging from the synthesis of Foley sound [17]–[19], source separation [20], [21] and super-resolution [22]. Musical generation in a continuous domain (i.e., where the representation is not discrete like in MIDI or sheet music), both of a final track [23], [24] or at the sub-stem level [25]–[28], is particularly successful when approached with diffusion models, despite the intrinsic difficulty of capturing complex instrumental timbres and the coherence between different stems [29].

Recent works [30], [31] based on Stable Diffusion [12] have enabled the synthesis of high-quality images reconstructed from EEG recordings (for a more informative survey about the growing literature on multi-modal brainwave decoding, the reader can consult [32]). In this article, we explore the use of ControlNet [33] as a mechanism for controlling AudioLDM2 [16], a large-scale pre-trained diffusion model on audio, using EEG data. While such a mechanism has been explored in the EEG to image literature with the CMVDM model [34], to our knowledge we are the first work that explores ControlNet for EEG to audio decoding (music in particular), performing such a task *(i)* without manual pre-processing/filtering and *(ii)* leveraging a naturalistic music dataset [35].

In Section II we review diffusion models and ControlNet. In Section III we describe how we apply such an architecture to our setting. In the following, we describe the dataset and experimental setup in Section IV, present the results in Section V, and conclude the paper in Section VI.

II. Background

A. Latent Diffusion Models

In the following, we review latent diffusion models [12], [36], on which we base our methodology. Given a VAE [37] mapping an audio signal (e.g., waveform or mel-spectrogram) $\mathbf{x}$ to a latent representation $\mathbf{z}$ via a stochastic encoder E^{VAE}, i.e., $\mathbf{z} \sim E^{\text{VAE}}(\mathbf{x})$, we can define a prior p_θ via a diffusion model ϵ_θ. Based on the DDPM formulation [10], ϵ_θ is trained to revert a forward Gaussian process, indexed by a time variable t ranging in $[0, T]$:

$$\mathbf{z}_t = \sqrt{\bar{\alpha}_t}\mathbf{z} + \sqrt{1-\bar{\alpha}_t}\boldsymbol{\epsilon}, \quad \boldsymbol{\epsilon} \sim \mathcal{N}(\mathbf{0}, \mathbf{I}), \tag{1}$$

with $\alpha_t = 1 - \beta_t$, $\bar{\alpha}_t = \prod_{s=1}^{t} \alpha_s$, and $\{\beta_t\}_{t=1,\dots,T}$ a noise schedule. More specifically, ϵ_θ is parameterized by a neural network (typically a U-Net [38]), and estimates the noisy log gradient $\nabla_{\mathbf{z}_t} \log p_\theta(\mathbf{z}_t)$ of the prior p_θ via denoising score matching [9]:

$$\min_\theta \mathbb{E}_{\mathbf{z},\boldsymbol{\epsilon},t}\left[\|\boldsymbol{\epsilon} - \epsilon_\theta(\mathbf{z}_t, t)\|_2^2\right], \tag{2}$$

where we compute $\mathbf{z}_t$ from latent data representations $\mathbf{z}$ using Eq. (1).

At inference time, we first sample $\hat{\mathbf{z}}_T \sim \mathcal{N}(\mathbf{0}, \mathbf{I})$ (i.e., the prior of the diffusion process following Eq. (1)), and compute a backward sequence $\{\hat{\mathbf{z}}_t\}$ integrating ϵ_θ via standard samplers such as DDIM [39] (which we employ in this paper). The $\hat{\mathbf{z}}_t$ is finally decoded with the VAE decoder D^{VAE} resulting in the waveform output $\hat{\mathbf{x}} = D^{\text{VAE}}(\hat{\mathbf{z}}_0)$.

B. ControlNet

ControlNet [33] is a parameter-efficient fine-tuning method (PEFT) for (U-Net based) diffusion models, which lets us condition the base model on additional inputs $\mathbf{y}$. Given the U-Net architecture, we can write the diffusion model ϵ_θ as:

$$\epsilon_\theta(\mathbf{z}_t, t) = D_{\theta_D}(B_{\theta_B}(E_{\theta_E}(\mathbf{z}_t, t)),$$

with E_{θ_E} an encoder, B_{θ_B} an inner bottleneck and $D_{\theta D}$ a decoder mapping data back to the original dimensions. ControlNet defines an *adapter* C_ϕ:

$$C_\phi(\mathbf{z}_t, \mathbf{y}, t) = E_\theta(c_{\text{in}}(\mathbf{z}_t) + P(\mathbf{y}), t), \tag{3}$$

initialized with the weights of a pre-trained E_{θ_E}, where P is a projection network mapping $\mathbf{y}$ to a tensor having the dimensions of $\mathbf{z}_t$ and c_{in} a zero initialized convolution. While the original ControlNet adapter is additionally conditioned on text (following E_{θ_E}), we omit text conditioning given that we do not use such a modality in this work. The ControlNet adapter outputs, for each layer $i = 1, \dots, I$, a feature $C_\phi^i(\mathbf{z}_t, \mathbf{y}, t)$ which is first convolved with a zero-initialized convolution c_i, then summed to the features of the original U-Net encoder $E_\theta^i(\mathbf{z}_t, t)$, defining:

$$E^i_{\theta_E,\phi}(\mathbf{z}_t, \mathbf{y}, t) = c_i(C^i_\phi(\mathbf{z}_t, \mathbf{y}, t)) + E^i_{\theta_E}(\mathbf{z}_t, t). \tag{4}$$

The c_i convolutions improve the generalizability of the fine-tuned model and avoid catastrophic forgetting. The full ControlNet network $\epsilon_{\theta,\phi}$ simply substitutes E_{θ_E} with $E_{\theta_E,\phi}$ and fine-tunes only the ϕ weights, keeping the θ weights frozen.

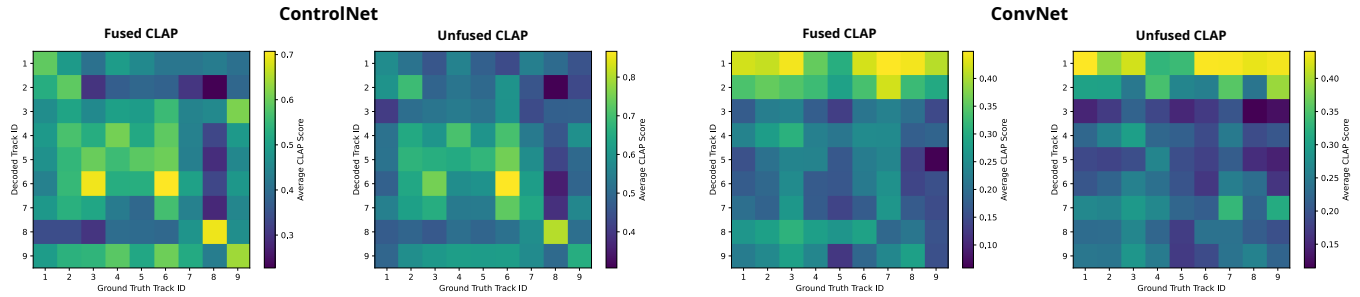

Fig. 3. **Cross-CLAP scores between decoded and ground truth tracks.** Left: Our method (ControlNet-2). Right: Baseline convolutional network. Notice how the matrices are closer to diagonal with our method, indicating higher correlation (as measured by CLAP score) between decoded and ground truth tracks.

III. Method

A. EEG-Conditioned ControlNet

In our method, we employ the ControlNet adapter to condition a (pre-trained) diffusion model on raw EEG information $\mathbf{y} \in \mathbb{R}^{F_\mathbf{y} \times S_\mathbf{y}}$, where $F_\mathbf{y}$ is the number of EEG channels and $S_\mathbf{y}$ the number of sampled time-steps. In this work, E^{VAE} is a 2D convolutional encoder mapping mel-spectrograms $\mathbf{x} \in \mathbb{R}^{F_\mathbf{x} \times S_\mathbf{x}}$ ($F_\mathbf{x}$ is the number of frequencies and $S_\mathbf{x}$ the number of time bins) to the latent representation $\mathbf{z} \in \mathbb{R}^{F_\mathbf{z} \times S_\mathbf{z} \times D_\mathbf{z}}$, where $F_\mathbf{z}$ and $S_\mathbf{z}$ are the compressed window dimensions and $D_\mathbf{z}$ the latent channels. As shown in Eq. (3), we need to map $\mathbf{y}$ with a projector P to a tensor having the dimensions of $\mathbf{z}$ in order to combine the two sources of information in the ControlNet adapter input. We define the projector $P : \mathbb{R}^{F_\mathbf{y} \times S_\mathbf{y}} \to \mathbb{R}^{F_\mathbf{z} \times S_\mathbf{z} \times D_\mathbf{z}}$ as a strided 1D convnet applied over the temporal dimension of $\mathbf{y}$, followed by a reshape operation.

We also experiment with adding a linear layer $L(\mathbf{y}, s)$ dependent on a subject id $s \in \mathbb{N}$, as defined in [8]. In such a case, the final projector is obtained as the composition $P \circ L$. The subject layer modulates the input EEG based on the additional subject id information.

As mentioned in Section I, we only apply minimal preprocessing to $\mathbf{y}$. Namely, we apply a robust scaler [8] followed by standard deviation clamping. Such methods are data-agnostic, and we do not rely on manual filtering.

B. Neural Embedding-Based Metrics

Given the low resolution in the sampling of EEG data from current sensors (e.g., 1 kHz) compared to that of audio (e.g., 16 kHz), it is difficult to faithfully reconstruct local track details. Yet, through generative methods such as the proposed model, we can reconstruct tracks at a semantic level, capturing details in a mid-global context (such as mood and timbral characteristics). To assess decoding quality in the aforementioned conditions we need to evaluate the outputs on a more compressed time scale, discarding local information. Therefore, in this paper, we propose to compute evaluation metrics over embeddings $\mathbf{e}$ and $\hat{\mathbf{e}}$ obtained from ground truth tracks $\mathbf{x}$ and generated outputs $\hat{\mathbf{x}}$ (conditioned on EEG data $\mathbf{y}$ corresponding to $\mathbf{x}$) using CLAP [40], [41] (global scale) and EnCodec [42] (intermediate scale) encoders.

We propose to use the following metrics for measuring decoding quality:

- **FAD —** The Fréchet Audio Distance (FAD) [43] computes global perceptual quality over the distribution of the generations (i.e., without comparing individual samples). It is defined as the Wasserstein distance between Gaussians estimated on embedding sets of ground truth data $\{\mathbf{e}_n\}$ and generated data $\{\hat{\mathbf{e}}_n\}$. We compute the embeddings both with CLAP and EnCodec. Other embedding spaces, such as VGGish [44], are not expressive enough for estimating robust metrics [45].
- **Pearson Coefficient —** Given embeddings of a ground truth track $\mathbf{e}$ and of a generated track $\hat{\mathbf{e}}$, the (sample) Pearson correlation coefficient r is defined as:
$$r = \frac{\sum_i (\mathbf{e}_i - \boldsymbol{\mu})(\hat{\mathbf{e}}_i - \hat{\boldsymbol{\mu}})}{\sqrt{\sum_i (\mathbf{e}_i - \boldsymbol{\mu})^2}\sqrt{\sum_i (\hat{\mathbf{e}}_i - \hat{\boldsymbol{\mu}})^2}}\,, \tag{5}$$
with $\boldsymbol{\mu}, \hat{\boldsymbol{\mu}}$ the means of $\mathbf{e}, \hat{\mathbf{e}}$, respectively. With CLAP embeddings, we notice that the means are very close to zero. Adding that such embeddings have unitary norm, Eq. (5) then becomes equivalent to the **CLAP Score**, the inner product $\langle \mathbf{e}, \hat{\mathbf{e}} \rangle$.
- **MSE —** With EnCodec embeddings, we also compute the mean square error $\frac{1}{I}\|\mathbf{e} - \hat{\mathbf{e}}\|_2^2$ (I is the maximum time-step).

To estimate the statistical significance of the metrics (excluding FAD), we follow [6] by computing p-values using 4000 bootstrapped null hypotheses obtained by randomly shuffling (with replacement) the indices of the reconstructed audio.

IV. Experimental Setup

A. Dataset

We train our models on NMED-T (Naturalistic Music EEG Dataset - Tempo) [35]. The dataset contains the EEG recordings of 20 adult subjects listening, each, to 10 high-quality songs (not synthesized from MIDI or monotimbral). The EEG data is recorded with the Electrical Geodesics, Inc. (EGI) GES300 system [46] using 128 channels, and it is sampled at 1 kHz. We resample the associated audio tracks at 16 kHz. We keep the first track (Trigger 21) as a held-out, out-of-distribution (OOD) track. The other 9 songs are

TABLE I
QUANTITATIVE RESULTS.

	FAD ↓		CLAP Score ↑		Pearson Coefficient (EnCodec) ↑		MSE (EnCodec) ↓	
Experiment	CLAP	EnCodec	Test set	OOD Track	Test set	OOD Track	Test set	OOD Track
Conv-2	1.09	320.78	0.26	-	0.26	-	3.19	-
Pretrained	0.80	163.31	0.38	0.38	0.63	0.64	2.35	2.18
ControlNet-2	0.38	148.59	**0.60** ($p < 0.01$)	0.58	**0.65** ($p < 0.05$)	**0.67**	**2.12**	**1.82**
ControlNet-All	0.42	**147.06**	0.59 ($p < 0.01$)	0.39	**0.65** ($p < 0.01$)	0.65	2.15 ($p < 0.05$)	1.94
Scratch-2	0.43	158.24	0.55 ($p < 0.01$)	**0.60** ($p < 0.05$)	0.61	0.63	2.46	2.14
Scratch-All	**0.36**	174.65	**0.60** ($p < 0.01$)	0.50	0.63 ($p < 0.05$)	0.63	2.42	2.21

divided into train (0-80%), validation (80-90%), and test (90-100%) subchunks. The models are validated with CLAP score during training. Such a choice stems from the difficulty of doing early stopping with the score matching metric in Eq. (2). Our minimal pre-processing pipeline involves excluding the face channels (retaining 124 channels), which we center using the mean over the first 1000 time steps and clamp with 20 standard deviations.

B. Implementation Details

We implement the proposed ControlNet on top of the AudioLDM2 repository. Specifically, we use the `audioldm2-music` checkpoint, publicly available on HuggingFace[1]. For the ControlNet projection, we use a 1D ConvNet with (256, 512, 1024, 2048) channels and strides (5, 2, 2, 2). The models process chunks of 3.5 seconds. All models are trained with Adam [47] optimizer using a learning rate of 10^{-4}. During training and inference, we ignore the textual conditioning mechanism of AudioLDM2 using as an input the constant string "`Pop music`". For all metrics in Table I we use the unfused version of CLAP.

V. EXPERIMENTS

For our experiments, we train two types of models. First, we train the ControlNet with the frozen diffusion model, using both data from subject 2 (ControlNet-2) and all subjects' data (ControlNet-All). At the same time, we want to test how the model performs when training both the ControlNet adapter and the diffusion U-Net from scratch, leading to the Scratch-2 and Scracth-All models. We compare the models both with Conv-2, a simple convolutional network trained on subject 2 data (following the structure of the projector P), and the "Pretrained" diffusion model, generating audio unconditionally (i.e., no EEG conditioning is occurring). When evaluating "All" models, we always use subject 2 test data. We showcase qualitative examples in Figure 2, and on our site[2], and list quantitative results in Table I. The OOD Track represents the held-out track (see Section IV). We show p-values when metrics are statistically significant ($p < 0.05$).

On all metrics, the proposed method outperforms the regressor convolutional baseline (which was also trained on the OOD track). We observe that on the Pearson Coefficient and the MSE metrics computed with EnCodec embeddings, the pretrained model, which does not have access to EEG data, scores similarly to our models. This indicates that EnCodec embeddings are not optimal for evaluation. On Pearson Coefficient, however, the good p-values on our models (except on Scratch-2) indicate higher statistical significance w.r.t. the Pretrained model. On CLAP Score we see a higher improvement with respect to the Conv-2 and Pretrained baselines, reaching a 0.60 CLAP Score on ControlNet-2 and Scrach-All. On FAD, our models also show improved performance. With CLAP Score on the test set, the p-values always show statistical significance. Notice that while we often obtain higher results on the OOD Track experiments (especially with EnCodec-based metrics), such metrics have high p values implying low statistical significance. In Figure 3, we compute matrices of (cross) CLAP scores between chunks of decoded tracks i and ground truth tracks j (in each entry i, j we average the scores between chunks of tracks i and j). We use both the fused and unfused versions of CLAP [41] for evaluation. The matrices are closer to diagonal with our ControlNet-2 model than with the baseline.

VI. CONCLUSIONS

In this paper, we have investigated the use of latent diffusion models for the task of naturalistic music decoding from EEG brainwaves. While we obtain non-negligible decoding results on unknown segments of known tracks, further research is required to improve generalization to distribution shift, both in terms of larger datasets and improved algorithms.

[1]https://huggingface.co/docs/diffusers/api/pipelines/audioldm2

[2]https://emilianpostolache.com/brainwave

REFERENCES

[1] T. I. Denk, Y. Takagi, T. Matsuyama, A. Agostinelli, T. Nakai, C. Frank, and S. Nishimoto, "Brain2music: Reconstructing music from human brain activity," *arXiv preprint arXiv:2307.11078*, 2023.

[2] Q. Huang, A. Jansen, J. Lee, R. Ganti, J. Y. Li, and D. P. Ellis, "Mulan: A joint embedding of music audio and natural language," in *Ismir 2022 Hybrid Conference*, 2022.

[3] A. Agostinelli, T. I. Denk, Z. Borsos, J. Engel, M. Verzetti, A. Caillon, Q. Huang, A. Jansen, A. Roberts, M. Tagliasacchi *et al.*, "Musiclm: Generating music from text," *arXiv preprint arXiv:2301.11325*, 2023.

[4] L. Bellier, A. Llorens, D. Marciano, A. Gunduz, G. Schalk, P. Brunner, and R. T. Knight, "Music can be reconstructed from human auditory cortex activity using nonlinear decoding models," *PLOS Biology*, vol. 21, no. 8, pp. 1–27, 08 2023. [Online]. Available: https://doi.org/10.1371/journal.pbio.3002176

[5] A. Inc, "Biosignal sensing device using dynamic selection of electrodes," Patent, 2023, uS Patent US20230225659A1.

[6] I. Daly, "Neural decoding of music from the eeg," *Scientific Reports*, vol. 13, no. 1, p. 624, 2023.

[7] S. Hochreiter and J. Schmidhuber, "Long short-term memory," *Neural Comput.*, vol. 9, no. 8, p. 1735–1780, nov 1997. [Online]. Available: https://doi.org/10.1162/neco.1997.9.8.1735

[8] A. Défossez, C. Caucheteux, J. Rapin, O. Kabeli, and J.-R. King, "Decoding speech perception from non-invasive brain recordings," *Nature Machine Intelligence*, vol. 5, no. 10, pp. 1097–1107, 2023.

[9] Y. Song and S. Ermon, "Generative modeling by estimating gradients of the data distribution," *Advances in neural information processing systems*, vol. 32, 2019.

[10] J. Ho, A. Jain, and P. Abbeel, "Denoising diffusion probabilistic models," *Advances in neural information processing systems*, vol. 33, pp. 6840–6851, 2020.

[11] P. Dhariwal and A. Nichol, "Diffusion models beat gans on image synthesis," *Advances in neural information processing systems*, vol. 34, pp. 8780–8794, 2021.

[12] R. Rombach, A. Blattmann, D. Lorenz, P. Esser, and B. Ommer, "High-resolution image synthesis with latent diffusion models," in *Proceedings of the IEEE/CVF conference on computer vision and pattern recognition*, 2022, pp. 10 684–10 695.

[13] Z. Kong, W. Ping, J. Huang, K. Zhao, and B. Catanzaro, "Diffwave: A versatile diffusion model for audio synthesis," in *International Conference on Learning Representations*, 2020.

[14] N. Chen, Y. Zhang, H. Zen, R. J. Weiss, M. Norouzi, and W. Chan, "Wavegrad: Estimating gradients for waveform generation," in *International Conference on Learning Representations*, 2021. [Online]. Available: https://openreview.net/forum?id=NsMLjcFaO8O

[15] S. Pascual, G. Bhattacharya, C. Yeh, J. Pons, and J. Serrà, "Full-band general audio synthesis with score-based diffusion," in *ICASSP 2023-2023 IEEE International Conference on Acoustics, Speech and Signal Processing (ICASSP)*. IEEE, 2023, pp. 1–5.

[16] H. Liu, Q. Tian, Y. Yuan, X. Liu, X. Mei, Q. Kong, Y. Wang, W. Wang, Y. Wang, and M. D. Plumbley, "Audioldm 2: Learning holistic audio generation with self-supervised pretraining," *arXiv preprint arXiv:2308.05734*, 2023.

[17] M. Comunità, R. F. Gramaccioni, E. Postolache, E. Rodolà, D. Comminiello, and J. D. Reiss, "Syncfusion: Multimodal onset-synchronized video-to-audio foley synthesis," in *ICASSP 2024-2024 IEEE International Conference on Acoustics, Speech and Signal Processing (ICASSP)*. IEEE, 2024, pp. 936–940.

[18] Y. Chung, J. Lee, and J. Nam, "T-foley: A controllable waveform-domain diffusion model for temporal-event-guided foley sound synthesis," *arXiv preprint arXiv:2401.09294*, 2024.

[19] J. Lee, J. Im, D. Kim, and J. Nam, "Video-foley: Two-stage video-to-sound generation via temporal event condition for foley sound," *arXiv preprint arXiv:2408.11915*, 2024.

[20] R. Scheibler, Y. Ji, S.-W. Chung, J. Byun, S. Choe, and M.-S. Choi, "Diffusion-based generative speech source separation," in *ICASSP 2023-2023 IEEE International Conference on Acoustics, Speech and Signal Processing (ICASSP)*. IEEE, 2023, pp. 1–5.

[21] S. Lutati, E. Nachmani, and L. Wolf, "Separate and diffuse: Using a pretrained diffusion model for better source separation," in *The Twelfth International Conference on Learning Representations*, 2024. [Online]. Available: https://openreview.net/forum?id=UXALv0lJZS

[22] C.-Y. Yu, S.-L. Yeh, G. Fazekas, and H. Tang, "Conditioning and sampling in variational diffusion models for speech super-resolution," in *ICASSP 2023-2023 IEEE International Conference on Acoustics, Speech and Signal Processing (ICASSP)*. IEEE, 2023, pp. 1–5.

[23] F. Schneider, Z. Jin, and B. Schölkopf, "Moûsai: Text-to-music generation with long-context latent diffusion," *arXiv preprint arXiv:2301.11757*, 2023.

[24] Z. Evans, C. Carr, J. Taylor, S. H. Hawley, and J. Pons, "Fast timing-conditioned latent audio diffusion," *arXiv preprint arXiv:2402.04825*, 2024.

[25] G. Mariani, I. Tallini, E. Postolache, M. Mancusi, L. Cosmo, and E. Rodolà, "Multi-source diffusion models for simultaneous music generation and separation," in *The Twelfth International Conference on Learning Representations*, 2023.

[26] B. Han, J. Dai, X. Song, W. Hao, X. He, D. Guo, J. Chen, Y. Wang, and Y. Qian, "Instructme: An instruction guided music edit and remix framework with latent diffusion models," *arXiv preprint arXiv:2308.14360*, 2023.

[27] E. Postolache, G. Mariani, L. Cosmo, E. Benetos, and E. Rodolà, "Generalized multi-source inference for text conditioned music diffusion models," in *ICASSP 2024-2024 IEEE International Conference on Acoustics, Speech and Signal Processing (ICASSP)*. IEEE, 2024, pp. 6980–6984.

[28] J. D. Parker, J. Spijkervet, K. Kosta, F. Yesiler, B. Kuznetsov, J.-C. Wang, M. Avent, J. Chen, and D. Le, "Stemgen: A music generation model that listens," in *ICASSP 2024-2024 IEEE International Conference on Acoustics, Speech and Signal Processing (ICASSP)*. IEEE, 2024, pp. 1116–1120.

[29] R. Ciranni, E. Postolache, G. Mariani, M. Mancusi, L. Cosmo, and E. Rodolà, "Cocola: Coherence-oriented contrastive learning of musical audio representations," 2024.

[30] Y. Bai, X. Wang, Y. Cao, Y. Ge, C. Yuan, and Y. Shan, "Dreamdiffusion: Generating high-quality images from brain eeg signals," *arXiv preprint arXiv:2306.16934*, 2023.

[31] Y.-T. Lan, K. Ren, Y. Wang, W.-L. Zheng, D. Li, B.-L. Lu, and L. Qiu, "Seeing through the brain: Image reconstruction of visual perception from human brain signals," 2023.

[32] W. Mai, J. Zhang, P. Fang, and Z. Zhang, "Brain-conditional multimodal synthesis: A survey and taxonomy," *arXiv preprint arXiv:2401.00430*, 2023.

[33] L. Zhang, A. Rao, and M. Agrawala, "Adding conditional control to text-to-image diffusion models," in *Proceedings of the IEEE/CVF International Conference on Computer Vision*, 2023, pp. 3836–3847.

[34] B. Zeng, S. Li, X. Liu, S. Gao, X. Jiang, X. Tang, Y. Hu, J. Liu, and B. Zhang, "Controllable mind visual diffusion model," in *Proceedings of the AAAI Conference on Artificial Intelligence*, vol. 38, no. 7, 2024, pp. 6935–6943.

[35] S. Losorelli, D. T. Nguyen, J. P. Dmochowski, and B. Kaneshiro, "Nmed-t: A tempo-focused dataset of cortical and behavioral responses to naturalistic music," in *International Society for Music Information Retrieval Conference*, 2017.

[36] A. Vahdat, K. Kreis, and J. Kautz, "Score-based generative modeling in latent space," *Advances in neural information processing systems*, vol. 34, pp. 11 287–11 302, 2021.

[37] D. P. Kingma and M. Welling, "Auto-encoding variational bayes," in *2nd International Conference on Learning Representations, ICLR 2014, Banff, AB, Canada, April 14-16, 2014, Conference Track Proceedings*, Y. Bengio and Y. LeCun, Eds., 2014.

[38] O. Ronneberger, P. Fischer, and T. Brox, "U-net: Convolutional networks for biomedical image segmentation," in *Medical Image Computing and Computer-Assisted Intervention–MICCAI 2015: 18th International Conference, Munich, Germany, October 5-9, 2015, Proceedings, Part III 18*. Springer, 2015, pp. 234–241.

[39] J. Song, C. Meng, and S. Ermon, "Denoising diffusion implicit models," in *International Conference on Learning Representations*, 2020.

[40] B. Elizalde, S. Deshmukh, M. Al Ismail, and H. Wang, "Clap learning audio concepts from natural language supervision," in *ICASSP 2023-2023 IEEE International Conference on Acoustics, Speech and Signal Processing (ICASSP)*. IEEE, 2023, pp. 1–5.

[41] Y. Wu, K. Chen, T. Zhang, Y. Hui, T. Berg-Kirkpatrick, and S. Dubnov, "Large-scale contrastive language-audio pretraining with feature fusion and keyword-to-caption augmentation," in *ICASSP 2023-2023 IEEE International Conference on Acoustics, Speech and Signal Processing (ICASSP)*. IEEE, 2023, pp. 1–5.

[42] A. Défossez, J. Copet, G. Synnaeve, and Y. Adi, "High fidelity neural audio compression," *Transactions on Machine Learning Research*, 2023.

[43] D. Roblek, K. Kilgour, M. Sharifi, and M. Zuluaga, "Fr\'echet audio distance: A reference-free metric for evaluating music enhancement algorithms," in *Proc. Interspeech*, 2019, pp. 2350–2354.

[44] S. Hershey, S. Chaudhuri, D. P. Ellis, J. F. Gemmeke, A. Jansen, R. C. Moore, M. Plakal, D. Platt, R. A. Saurous, B. Seybold *et al.*, "Cnn architectures for large-scale audio classification," in *2017 ieee international conference on acoustics, speech and signal processing (icassp)*. IEEE, 2017, pp. 131–135.

[45] A. Gui, H. Gamper, S. Braun, and D. Emmanouilidou, "Adapting frechet audio distance for generative music evaluation," in *ICASSP 2024-2024 IEEE International Conference on Acoustics, Speech and Signal Processing (ICASSP)*. IEEE, 2024, pp. 1331–1335.

[46] D. M. Tucker, "Spatial sampling of head electrical fields: the geodesic sensor net," *Electroencephalography and Clinical Neurophysiology*, vol. 87, no. 3, pp. 154–163, 1993. [Online]. Available: https://www.sciencedirect.com/science/article/pii/001346949390121B

[47] D. P. Kingma and J. Ba, "Adam: A method for stochastic optimization," *arXiv preprint arXiv:1412.6980*, 2014.